XTEND 4.0

REPEATER 136-174MHz

Ready-to-use, high gain, digital filter (option) & rugged repeater

Multi modulations operation with TruPWR™ (TETRA/INPT/DMR/ANALOG)

Cost-effective remote unit (+17/+30dBm)

RFFO (optical fiber) or RFRF operation

Key features

Ultra-fast 100µs squelch / timeslot ALC based to avoid near BS desensitisation
And to allow a large number of MS connections along the RU

In-house WDM RFoG system up to 16 RUs and distance of 35km

Remote unit with low and high-power cost-effective solution

Secured Talk2M© monitoring cloud from EWON© (option)

Low time equipment deployment thanks to plug & play system

Full compatible with MDAS© product range

Benefits

- ☑ **Reliability and easy maintenance with no RU with FAN**
- ☑ **Low monitoring development cost with the Talk2M©**
- ☑ **Unconditionally stable and usable with existing optical fiber**
- ☑ **Monitoring over optical fiber**

©Copyright 2018-2022 | All rights reserved. All data and information mentioned are non-contractual and subject to change anytime without any notice.
SEE GROUP: SEE GROUP: TECHLID - INNOVALIA, Bat. E, 46-48 Chemin de la Bruyère, F69570 DARDILLY (LYON), FRANCE | t: +33 4 75 31 84 60 | e: contact@see.fr

OPTICAL FIBER DAS & RFRF REPEATER

Poor or inexistent PMR coverage is a problem for public safety infrastructure (building, tunnel…).

We are providing a full range of 136-174 MHz indoor repeater, for all kind of application.

1.1 OPTICAL FIBER DAS (DISTRIBUTED ANTENNAS SYSTEM)

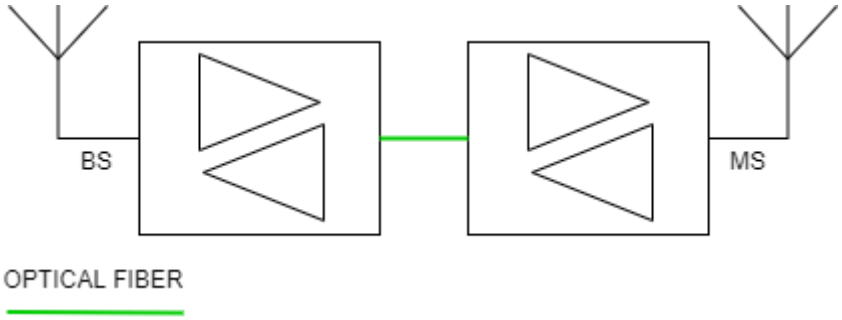

Figure 1 RFFO REPEATER

Our **DAS** is using an **in-house master unit (MU)**, with the following advantages:

- Network safe with no noise guaranteed
- Uplink dynamic ALC & ultra-fast 100µs squelch (uplink muting with no MS)
- Digital filter (option)
- In-house monitoring for critical network with MOR (minimum operating requirements)
- Plug & play and ultra-secured monitoring platform with Talk2M©

Our **DAS** is using an **in-house analog optical master unit (OMU)**, with the following advantages:

- Single mode optical fiber
- Long distance up to 35KM achievable
- Up to 16 remote unit with only 6x 1U OMU

Our **DAS** is using an **in-house remote unit (RU)**, with the following advantages:

- Cost effective solution
- In-house monitoring for critical network with MOR (minimum operating requirements)
- Optional leaky feeder monitoring, bias voltage for in-line BDA and custom request
- Local I/O (option)

©Copyright 2018-2022 | All rights reserved. All data and information mentioned are non-contractual and subject to change anytime without any notice.
SEE GROUP: SEE GROUP: TECHLID - INNOVALIA, Bat. E, 46-48 Chemin de la Bruyère, F69570 DARDILLY (LYON), FRANCE | t: +33 4 75 31 84 60 | e: contact@see.fr

1.2 RFRF REPEATER

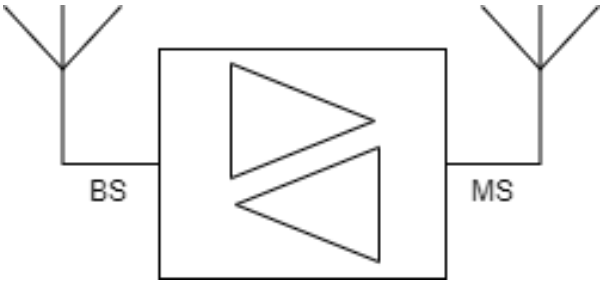

Figure 2 RFRF REPEATER

Our **RFRF repeater** provides ready-to-use, high gain, digital filter (option) and high power (option) in a compact box:

- Plug & play with automatic RF setup
- Network safe with no noise guaranteed
- Up to 90dB of gain
- Uplink dynamic ALC & ultra-fast 100µs squelch (uplink muting with no MS)
- Digital filter (option)
- Monitoring for critical network with MOR (minimum operating requirements)

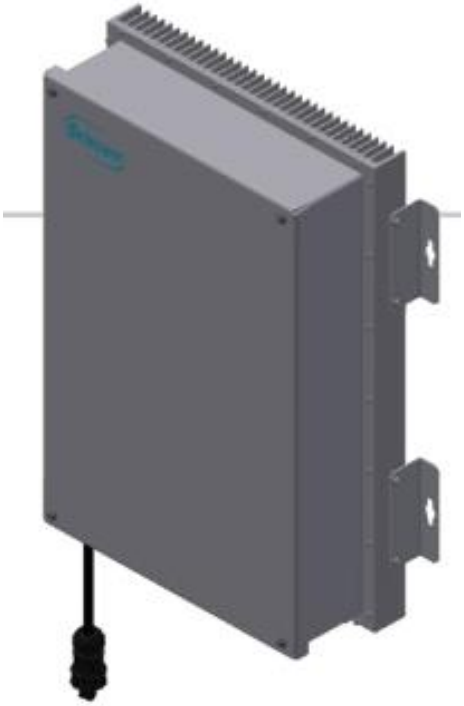

©Copyright 2018-2022 | All rights reserved. All data and information mentioned are non-contractual and subject to change anytime without any notice.
SEE GROUP: SEE GROUP: TECHLID - INNOVALIA, Bat. E, 46-48 Chemin de la Bruyère, F69570 DARDILLY (LYON), FRANCE | t: +33 4 75 31 84 60 | e: contact@see.fr

Monitoring architecture

With the secured Ewon© Talk2M© monitoring platform and a unique ID hardware, turn on your equipment and get a full monitoring solution in few minutes, with your dedicated Talk2M© account user.

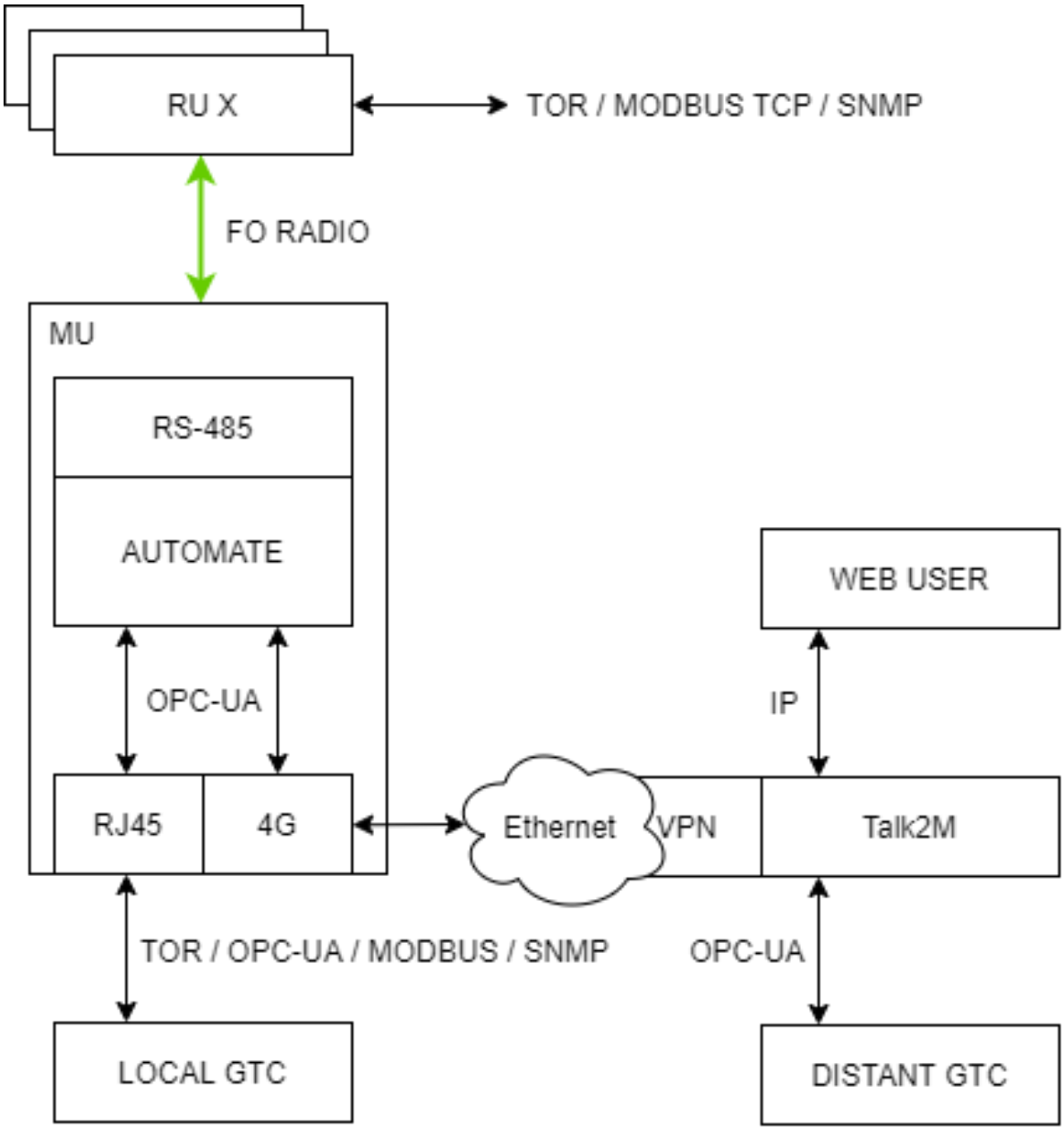

©Copyright 2018-2022 | All rights reserved. All data and information mentioned are non-contractual and subject to change anytime without any notice.
SEE GROUP: SEE GROUP: TECHLID - INNOVALIA, Bat. E, 46-48 Chemin de la Bruyère, F69570 DARDILLY (LYON), FRANCE | t: +33 4 75 31 84 60 | e: contact@see.fr

Specifications

RF features		
Frequency bands	**UL (MHz)**	**DL (MHz)**
	136-174	**136-174**
Spacing duplex	**4.45-13MHz**	
Bandwidth (*option: digital filter)	**1.2MHz (12.5 KHz to 1.2 MHz*)**	
UL POWER	**+17dBm**	
DL POWER (*option: linearized PA)	**+17dBm**	**+30dBm***
OIP3	**+48.5dBm**	**+56dBm**
Rated output power per channel (DL)		
1 channel	**+17dBm**	**+30dBm**
2 channels (60dBc)	**+14dBm**	**+27dBm**
4 channels (60dBc)	**+11dBm**	**+24dBm**
8 channels (60dBc)	**+8dBm**	**+21dBm**
16 channels (60dBc)	**+5dBm**	**+18dBm**
Gains (step 0.5 dB/ precision ± 5dB)	***35-80dB***	***45-90dB***
Bandwidth ripple	***± 2dB***	
Noise factor	***< 8dB (max gain)***	
Adjustment range of squelch (MS IN)	***-70 to -20 dBm***	
Impedance	***50Ω***	
Delay	***4µs***	
Standard	***ETSI compliant***	

©Copyright 2018-2022 | All rights reserved. All data and information mentioned are non-contractual and subject to change anytime without any notice.
SEE GROUP: SEE GROUP: TECHLID - INNOVALIA, Bat. E, 46-48 Chemin de la Bruyère, F69570 DARDILLY (LYON), FRANCE | t: +33 4 75 31 84 60 | e: contact@see.fr

Digital Filtering Module (option for DL only)

Mode	**Channel of band selective**			
Bandwidth (channel selective)	**12.5KHz**	**25KHz**	**50KHz**	**90KHz**
Number of fixed filters	**18**	**12**	**9**	**4**
Number of dynamic filters	**10**	**6**	**5**	**2**
Bandwidth (band selective)	**200KHz to 5MHz**			
Number of fixed bands	**4**			
Delay	**25 to 45µs**			

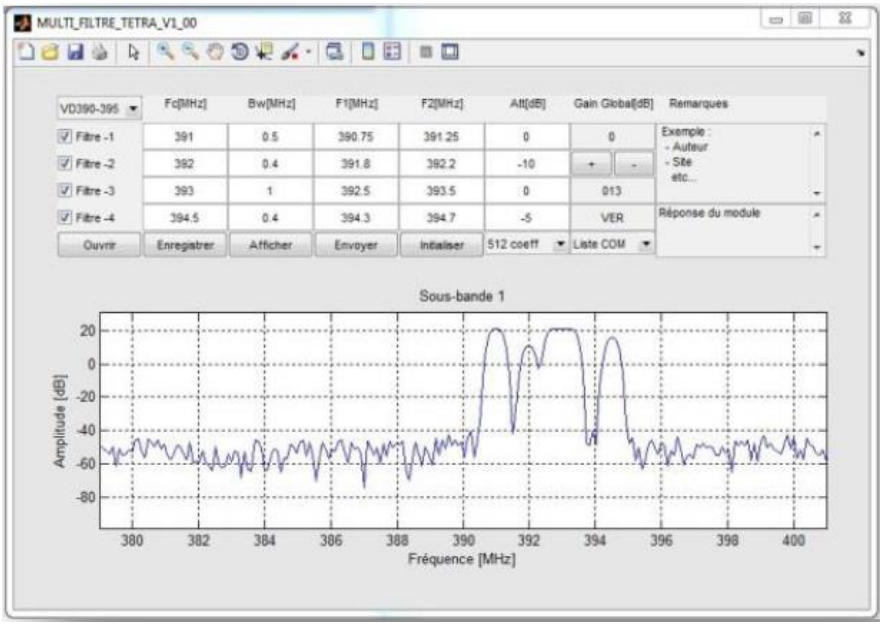

DAS features

Monitoring	**LoRa over optical fiber**
Monitoring frequency	**868MHz (option 433MHz)**
Rus allowed	**16 (6xRus for 1xOMU 1U)**
FO max. distance	**35KM**
FO specs.	**SC-APC/WDM1310-1550nm/Popt+3dBm**
FO redundancy	**Up to 2xFO per RU with the MDAS RU COUPLER**

©Copyright 2018-2022 | All rights reserved. All data and information mentioned are non-contractual and subject to change anytime without any notice.
SEE GROUP: SEE GROUP: TECHLID - INNOVALIA, Bat. E, 46-48 Chemin de la Bruyère, F69570 DARDILLY (LYON), FRANCE | t: +33 4 75 31 84 60 | e: contact@see.fr

Monitoring features

Alarm	Minor/major alarms on native's dry contact Minor alarm says MOR ok Major alarm says MOR not ok
LED (native)	Minor (RED BLINK) Major alarm (RED permanent)
I/O (native)	2x dry contact / 2x optocoupled input
I/O (option)	8x dry contact / 8x optocoupled input
PLC (option)	EWON FLEXY 202 (RFFO) / 205(RFRF)
Remote monitoring platform	Talk2M©
Cybersecurity	ISO 27001 / IEC62443 Level 1: Physical LAN commutation Level 2: Firewall Level 3: Traffic encryption (OpenVPN/SSL/TLS) Level 4: Factory/user access policy Level5: Server infrastructure monitoring Level 6: Company policy compliance
Distant connection (option)	3/4G/RJ45
Local protocol	OPC UA, Modbus, MQTT, SNMP, HTTP

©Copyright 2018-2022 | All rights reserved. All data and information mentioned are non-contractual and subject to change anytime without any notice.
SEE GROUP: SEE GROUP: TECHLID - INNOVALIA, Bat. E, 46-48 Chemin de la Bruyère, F69570 DARDILLY (LYON), FRANCE | t: +33 4 75 31 84 60 | e: contact@see.fr

Mechanical characteristics

RF ANT connector		N-Type (female)
Dimensions (H x P x l)		RFRF / FORF RU 580x150x400mm (BOX) RFFO MU 133x450x483mm (3U 19”) RFRF/ FORF RU 177x450x483mm (4U 19”)
Weight		RFRF / FORF RU 18.5kg (BOX)
Protection	Box	IP65
	Rack	IP20
Cooling system	Box	Natural cooling convection (Internal FAN are used to increase MTBF but not required for nominal operation)
	Rack	Internal fans (redundant)
Temperature range		-25 / +50 °C
RAL		9002
Relative humidity range		≤95%
MTBF		100 000h

Electrical characteristics

REPEATER (MU, RU, RFRF)			
Power supply		100-240VAC / +48VDC / +24VDC	
Internal power converter		Redundant (option)	
Power consumption	UL ↓ / DL →	+17dBm	+30dBm
	+17dBm	45W	75W
OMU			
Dimensions		1U / 6xFO	
Power supply / consumption		100-240VAC / 50W	

For more information: www.see-critical.com

©Copyright 2018-2022 | All rights reserved. All data and information mentioned are non-contractual and subject to change anytime without any notice.
SEE GROUP: SEE GROUP: TECHLID - INNOVALIA, Bat. E, 46-48 Chemin de la Bruyère, F69570 DARDILLY (LYON), FRANCE | t: +33 4 75 31 84 60 | e: contact@see.fr